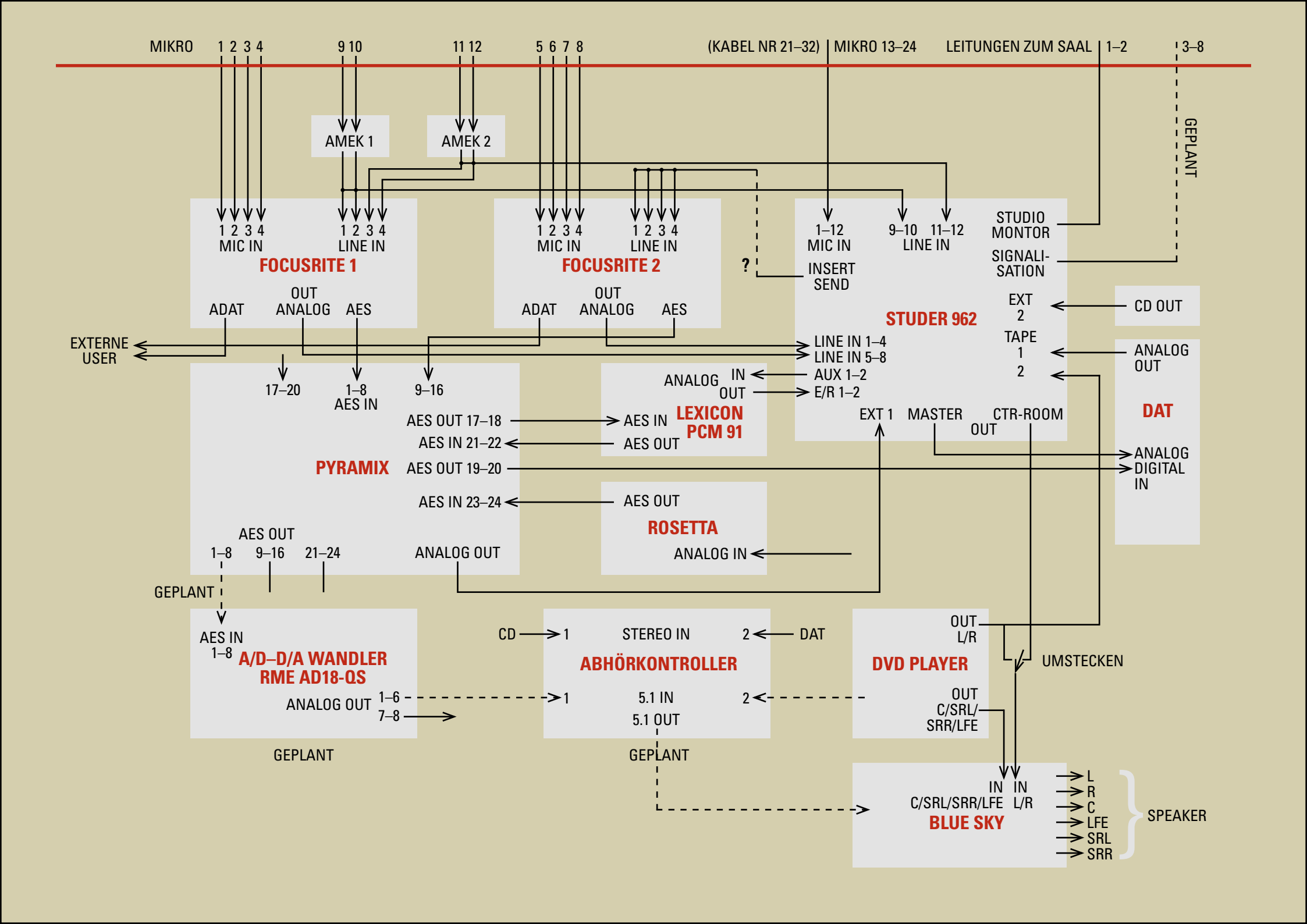
MIKRO 1 2 3 4
9 10
11 12
5 6 7 8
(KABEL NR 21–32)
MIKRO 13–24
LEITUNGEN ZUM SAAL
1–2
3–8
GEPLANT
AMEK 1
AMEK 2
1 2 3 4 MIC IN
1 2 3 4 LINE IN
FOCUSRITE 1
ADAT
OUT ANALOG
AES
1 2 3 4 MIC IN
1 2 3 4 LINE IN
FOCUSRITE 2
ADAT
OUT ANALOG
AES
?
1–12 MIC IN
9–10 11–12 LINE IN
INSERT SEND
STUDIO MONTOR
SIGNALI-SATION
STUDER 962
EXT 2
CD OUT
TAPE 1 2
ANALOG OUT
EXTERNE USER
LINE IN 1–4
LINE IN 5–8
AUX 1–2
E/R 1–2
ANALOG IN OUT
EXT 1
MASTER OUT
CTR-ROOM
DAT
ANALOG DIGITAL IN
17–20
1–8 AES IN
9–16
PYRAMIX
AES OUT 17–18
AES IN 21–22
AES OUT 19–20
AES IN 23–24
AES IN
AES OUT
LEXICON PCM 91
AES OUT
ROSETTA
ANALOG IN
AES OUT
1–8 9–16 21–24
ANALOG OUT
GEPLANT
AES IN 1–8
A/D–D/A WANDLER RME AD18-QS
ANALOG OUT 1–6 7–8
GEPLANT
CD 1
STEREO IN
2 DAT
ABHÖRKONTROLLER
1
5.1 IN
5.1 OUT
2
GEPLANT
OUT L/R
DVD PLAYER
OUT C/SRL/SRR/LFE
UMSTECKEN
IN C/SRL/SRR/LFE
IN L/R
BLUE SKY
L
R
C
LFE
SRL
SRR
SPEAKER